Datasheet | Alta Video | 4MP | 6MP | 8MP | Up to 10-Year Warranty

# Avigilon Alta H6A Dome cameras

## Turn sight and sound into improved safety

Focus your security with Avigilon H6A Dome cameras. Offering resolutions up to 8 MP and integrated AI-driven video and audio intelligence, this enables faster activity detection and proactively streamlines investigations with high-quality evidence.

### High-definition coverage

Get the clarity you need with video up to 8MP. Secure large areas with long-range analytical detection, optimizing coverage while potentially reducing hardware count

### AI-powered video analytics

Transform video into instant insights with built-in analytics that alert teams to abnormal behavior and critical events, enabling quicker, more informed responses.

### Trusted security, built-in

Secure from the ground up with advanced cybersecurity features, including FIPS 140-3 rated Trusted Platform Module (TPM) and Secure Boot.

### Durable, all-weather design

Deploy with confidence in challenging environments. Rated IK10/11, IP66/68, and NEMA Type 4X, the H6A Dome withstands impact, water, and corrosion, providing continuous security.

### Integrated audio awareness

Expand beyond sight with a built-in microphone for advanced alerts for sounds. Review the corresponding video instantly, with the option to record necessary audio evidence for review.

### Cloud-managed convenience

Manage your sites from anywhere with a cloud-native platform. Automatic software updates deliver the newest features and security protections seamlessly, reducing maintenance overhead.

For more information, visit avigilon.com/security-cameras/h6a-dome.

# Specifications

| IMAGE PERFORMANCE | | 4.0 MP | 6.0 MP | 8.0 MP (4K ULTRA HD) |
|---|---|---|---|---|
| Image Sensor | | 1/1.8” progressive scan CMOS | 1/1.8” progressive scan CMOS | 1/1.8” progressive scan CMOS |
| Max Resolution (H x V) | Maximum | 2688 x 1520 15fps @3Mbps | 3326 x 1872 15fps @3Mbps | 3840 x 2160 15fps @6Mbps |
| | High | 1920 x 1080 15fps @1.5Mbps | 1920 x 1080 15fps @1.5Mbps | 2560 x 1440 15fps @3Mbps |
| | Medium | 1280 x 720 15fps @750Kbps | 1280 x 720 15fps @750Kbps | 1920 x 1080 15fps @1.5Mbps |
| | Low | 640 x 360 10fps @400Kbps | 848 x 480 10fps @400Kbps | 1280 x 720 5fps @700Kbps |
| Dynamic Range | WDR Off | Up to 83 dB | Up to 83 dB | Up to 83 dB |
| | WDR On (IEC 62676) | Up to 106dB (dual exposure, 30 fps)<br>Up to 136dB (triple exposure, 20 fps or less) | Up to 130dB (dual exposure, 30 fps) | Up to 130dB (dual exposure, 30 fps) |
| | WDR On | Up to 120dB (dual exposure, 30 fps)<br>Up to 144dB (triple exposure, 20 fps or less) | Up to 144 dB (dual exposure, 20 fps or less) | Up to 144 dB (dual exposure, 20 fps or less) |
| Max Image Rate | | (50 Hz/60 Hz): 25 fps/30 fps | (50 Hz/60 Hz): 25 fps/30 fps | (50 Hz/60 Hz): 25 fps/30 fps |
| Signal-to-Noise Ratio (SNR) | | > 50 dB | > 50 dB | > 50 dB |

| IMAGE CONTROL | |
|---|---|
| Image Compression Method | H.264 |
| Streaming | Multi-stream H.264 |
| Electronic Shutter Control | Automatic |
| Iris Control | Automatic |
| Day/Night Control | Automatic, Manual |
| Flicker Control | 60 Hz, 50 Hz |
| White Balance | Automatic |
| Image Rotation | 0°, 90°, 180°, 270° including Corridor Mode |
| Privacy Zones | Up to 64 zones |

| LENS AND IR ILLUMINATION | | 2.8 - 12 MM | 4.4 - 9.3 MM | 10.9 - 29 MM |
|---|---|---|---|---|
| IR Illumination Max Distance[1] (high power 850 nm LEDs) | | 50 m (164 ft) full tele<br>25 m (82 ft) full wide | 50 m (164 ft) full tele<br>25 m (82 ft) full wide | 70 m (230 ft) full tele<br>40 m (131 ft) full wide |
| Minimum Illumination | 4MP | N/A | With IR: 0 lux in monochrome mode<br>Without IR: 0.003 lux in monochrome mode; 0.008 lux in color mode | With IR: 0 lux in monochrome mode<br>Without IR: 0.004 lux in monochrome mode; 0.01 lux in color mode |
| | 6MP & 8MP | N/A | With IR: 0 lux in monochrome mode<br>Without IR: 0.006 lux in monochrome mode; 0.02 lux in color mode | With IR: 0 lux in monochrome mode<br>Without IR: 0.008 lux in monochrome mode; 0.03 lux in color mode |
| Horizontal Angle of View Based on Aspect Ratio | 4MP | N/A | (16:9) 47° – 111°<br>(4:3) 35° – 78° | (16:9) 15° – 42°<br>(4:3) 11° – 31° |
| | 6MP & 8MP | N/A | (16:9) 47° – 109°<br>(4:3) 35° – 78° | (16:9) 15° – 42°<br>(4:3) 11° – 31° |
| Vertical Angle of View Based on Aspect Ratio | 4MP, & 6MP, & 8MP | N/A | (16:9) 26° – 57°<br>(4:3) 26° – 57° | (16:9) 9° – 23°<br>(4:3) 9° – 23° |
| Max Aperture | | F1.4 | F1.3 | F1.7 |
| Control | | Remote Zoom and Focus, Autofocus, IR Cut Filter | Remote Zoom and Focus, Autofocus, IR Cut Filter | Remote Zoom and Focus, Autofocus, IR Cut Filter |

[1] IR illumination power may be reduced at higher operating temperatures.

| NETWORK | |
|---|---|
| Network | 100BASE-TX for H6A |
| Cabling | CAT5e |
| Connector | RJ-45 |
| ONVIF | ONVIF® compliance Profile S, Profile T, Profile M and Profile G (www.onvif.org) |
| Security | Password protection, HTTPS encryption, digest authentication, WS authentication, user access log, 802.1x port based authentication, onboard FIPS 140-3 L3 certified TPM, Secure Boot, Signed and encrypted firmware |
| Protocols | IPv6, IPv4, HTTP, HTTPS, SOAP, DNS, NTP, RTSP, RTCP, RTP, TCP, UDP, IGMP, ICMP, DHCP, ARP, HSTS |
| Streaming Protocols | WebRTC, RTP/RTSP/UDP, RTP/RTSP/TCP, RTP/RTSP/HTTP/TCP, RTP/RTSP/HTTPS/TCP |
| Device Management | SNMP v2c, SNMP v3 |

| PERIPHERALS | |
|---|---|
| USB Port[2] | USB 2.0 |
| Onboard Storage | Up to two microSD/microSDHC/microSDXC cards fitted to match purchased retention period. |

[2] Not currently supported.

| AUXILIARY I/O | |
|---|---|
| Audio Compression Method | G.711 PCM 8 kHz, Opus |
| Audio Input/Output | Line level input and output |
| External I/O Terminals[3] | 1 x Relay In, 1 x Relay Out, 1 x 12 VDC out at 50 mA |
| Microphone | Built-in microphone for audio analytics, for certain variants, with physical disable switch |

[3] Not currently supported.

| MECHANICAL | | SURFACE MOUNT | IN-CEILING MOUNT | PENDANT MOUNT |
|---|---|---|---|---|
| Dimensions (DxH) | | 182 mm x 132 mm; 7.16" x 5.19" | 219 mm x 198 mm; 8.62" x 7.79" | 182 mm x 190 mm; 7.16" x 7.48" |
| Accessory Only Dimensions (DxH) | | N/A | 219 mm x 115 mm; 8.62" x 4.52" | 155 mm x 65 mm; 6.1" x 2.55" |
| Weight | Indoor Dome | 1.21 kg; 2.66 lbs | 1.83 kg; 4.03 lbs | 1.63 kg; 3.59 lbs |
| | Outdoor Dome | 1.59 kg; 3.5 lbs | 1.99 kg; 4.38 lbs | 2.01 kg; 4.43 lbs |
| Dome Bubble | | Polycarbonate | Polycarbonate | Polycarbonate |
| Body | | Polycarbonate and aluminum | Polycarbonate and aluminum | Polycarbonate and aluminum |
| Housing | | Surface mount | Recessed mount | Pendant mount |
| Finish | Indoor Dome | Plastic injection mold grey (Pantone 427C) | Plastic injection mold grey (Pantone 427C) & Powdercoat black | Powdercoat grey & plastic injection mold grey (Pantone 427C) |
| | Outdoor Dome | Powdercoat grey (Pantone 427C) | Plastic injection mold grey (Pantone 427C) & Powdercoat black | Powdercoat grey (Pantone 427C) |
| Adjustment Range | | Pan 360°, Azimuth 349°, Tilt 92° | Pan 360°, Azimuth 349°, Tilt 92° Polycarbonate and aluminum | Pan 360°, Azimuth 349°, Tilt 92° |

| ELECTRICAL | | |
|---|---|---|
| Power Consumption | | 25W (18W with no IR or IR disabled) |
| Power Source | PoE | IEEE 802.3af Class 3 |
| | PoE+ | IEEE 802.3at Class 4 |
| IR Illumination Behavior | PoE | IR illuminator will turn off if the temperature is 65°C (149°F) or higher. The illuminator will operate at 50% power and 25% power if below -25°C (-13°F) |
| | PoE+ | IR illuminator will turn off if the temperature is 65°C (149°F) or higher. The illuminator will operate at 50% power if the temperature is between 55°C (131°F) and 65°C (149°F) and 50% power if below -25°C (-13°F) |
| External Power | | 12-24 VDC +/-10% |
| RTC Backup Battery | | 3V manganese lithium |
| Memory | | 4GB RAM, 4GB Flash |

| ENVIRONMENTAL | | INDOOR DOME | OUTDOOR DOME |
|---|---|---|---|
| Operating Temperature | PoE | -10°C to +55°C (-14°F to 131°F) | -30°C to +65°C (-22°F to 149°F) with IEEE 802.3af Class 3 (13W PoE) |
| | With External Power or PoE+ | -10°C to +55°C (-14°F to 131°F) | -50°C to +65°C (-58°F to 149°F) with external power or IEEE 802.3at Class 4 (25.5W PoE+) |
| Startup Temperature | PoE | -10°C to +55°C (-14°F to 131°F) | -30°C to +65°C (-22°F to 149°F) with IEEE 802.3af Class 3 (13W PoE) |
| | With External Power or PoE+ | -10°C to +55°C (-14°F to 131°F) | -40°C to +65°C (-40°F to 149°F) with external power or IEEE 802.3at Class 4 (25.5W PoE+) |
| Absolute Maximum Temperature | | 74 °C (165 °F) per NEMA TS2 (Temp.) para 2.2.7.2 - 2.2.7.7 | 74 °C (165 °F) per NEMA TS2 (Temp.) para 2.2.7.2 - 2.2.7.7 |
| Humidity | | 0 - 95% non-condensing | 0 - 95% non-condensing |

| CERTIFICATIONS | | |
|---|---|---|
| Certifications/Approvals | | UL, cUL, CE, ROHS, RCM, UKCA, NOM, KC, BIS |
| Safety Standards | | UL 62368-1, CSA 62368-1, IEC/EN 62368-1, IEC 62471, UL 2043 Plenum (in-ceiling only) |
| Environmental Standards/Ratings | Indoor Dome | IEC 60529 IP54, IEC/EN 62262 IK11 (IK10 Surface Mount w/IR) |
| | Outdoor Dome | IEC 60529 IP66, IP67, IP68 (2m depth for 2 hours), IPX9K, NEMA 4X, IEC 60068-2 Shock & Vibration, NEMA TS2 Sec 2.2.7-2.2.9, IK11 |
| Electromagnetic Emissions Standards | | FCC Part 15 Subpart B Class B, ICES-003 Class B, EN 55032 Class B, EN 61000-6-3, EN 61000-3-2, EN 61000-3-3, EN 50121-4, EN 50130-4 |
| Electromagnetic Immunity Standards | | EN 55035, EN 61000-6-1, EN 50121-4, EN 50130-4 |
| Warranty[4] | | Limited 10 Year Warranty (avigilon.com/support/warranty) |

[4] With valid camera license.

# Analytics specifications

For information about the analytics available from cameras attached to Alta Video, see https://docs.avigilon.com/bundle/alta-video-vms/resource/alta-video-vms.pdf.

# Outline Dimensions

## H6A Dome Camera with Surface Mount

| [X.X] | INCHES |
|---|---|
| X | MM |

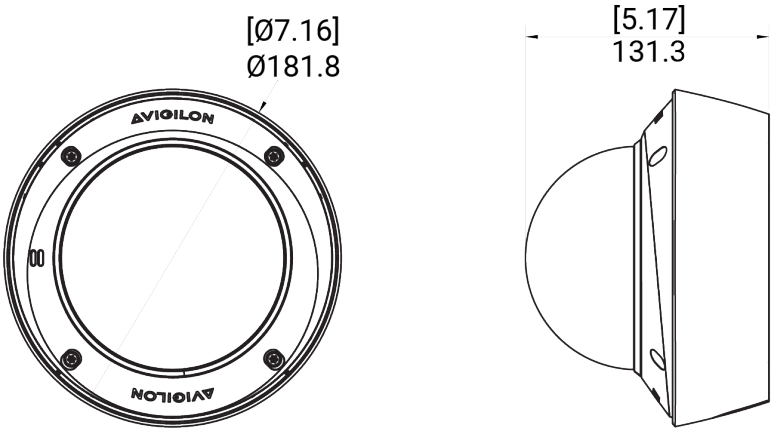


## H6A Dome Camera with In-Ceiling Mount (CLADP-1001)

| [X.X] | INCHES |
|---|---|
| X | MM |

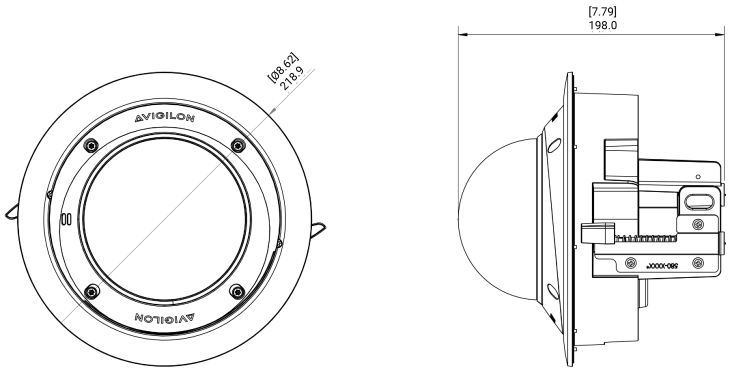

## H6A Dome Camera with NPT Adapter (H6A-MT-NPTA1)

| [X.X] | INCHES |
|---|---|
| X | MM |

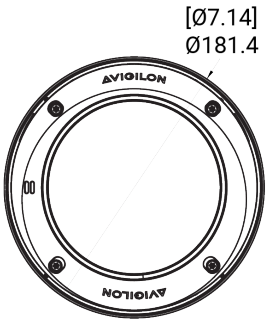


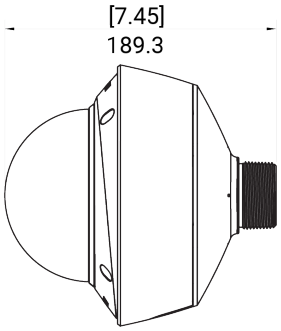


## H6A Dome Camera with NPT Adapter (H6A-MT-NPTA1) and Pendant Wall Mount (WLMT-1021)

| [X.X] | INCHES |
|---|---|
| X | MM |

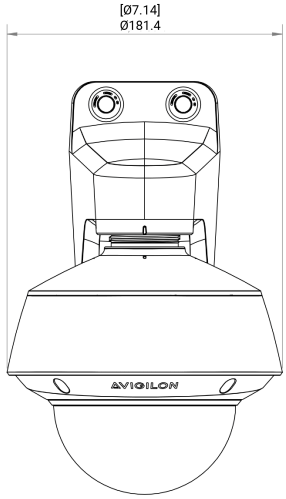


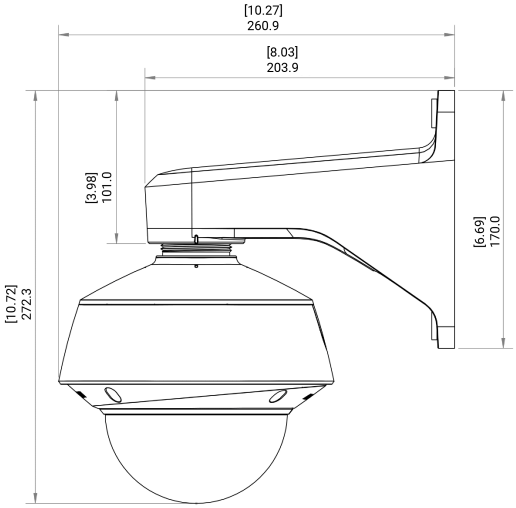


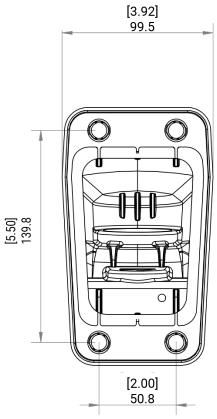

# Ordering Information

| MOUNTING SCENARIO | | ORDERING INFORMATION |
|---|---|---|
| Pendant wall mount | | Order one of:<br>• Indoor or outdoor surface mount H6A Dome camera<br>• H6A-MT-NPTA1<br>• WLMT-1021<br>Optional:<br>• PLMT-1001 (Pole mount adapter)<br>• CRNMT-1001 (Corner mount adapter) |
| Pendant NPT mount | | Order one of:<br>• Indoor or outdoor surface mount H6A Dome camera<br>• H6A-MT-NPTA1 |
| Surface mount | | Order one of:<br>• Indoor or outdoor surface mount H6A Dome camera<br>Optional:<br>• DMSLD-1001 (weathershield) |
| In-ceiling mount | | Order one of:<br>• Indoor or outdoor surface mount H6A Dome camera<br>• CLADP-1001<br>Optional:<br>• CLPNL-1011 (metal ceiling panel) |

## H6A Outdoor Dome Camera Models

| MODELS | MP | LENS | IR | MICROPHONE | RETENTION (DAYS) |
|---|---|---|---|---|---|
| 4.0C-H6A-DO1-IR-B-30 | 4.0 | 4.4 - 9.3mm | ✓ | ✓ | 30 |
| 4.0C-H6A-DO1-IR-B-60 | 4.0 | 4.4 - 9.3mm | ✓ | ✓ | 60 |
| 6.0C-H6A-DO1-IR-B-30 | 6.0 | 4.4 - 9.3mm | ✓ | ✓ | 30 |
| 6.0C-H6A-DO1-IR-B-60 | 6.0 | 4.4 - 9.3mm | ✓ | ✓ | 60 |
| 6.0C-H6A-DO1-IR-B-120 | 6.0 | 4.4 - 9.3mm | ✓ | ✓ | 120 |
| 8.0C-H6A-DO1-IR-B-30 | 8.0 | 4.4 - 9.3mm | ✓ | ✓ | 30 |
| 8.0C-H6A-DO1-IR-B-60 | 8.0 | 4.4 - 9.3mm | ✓ | ✓ | 60 |

## H6A Indoor Dome Camera Models

| MODELS | MP | LENS | IR | MICROPHONE | RETENTION (DAYS) |
|---|---|---|---|---|---|
| 4.0C-H6A-D1-IR-B-30 | 4.0 | 4.4 - 9.3mm | ✓ | ✓ | 30 |
| 4.0C-H6A-D1-IR-B-60 | 4.0 | 4.4 - 9.3mm | ✓ | ✓ | 60 |
| 6.0C-H6A-D1-IR-B-30 | 6.0 | 4.4 - 9.3mm | ✓ | ✓ | 30 |
| 6.0C-H6A-D1-IR-B-60 | 6.0 | 4.4 - 9.3mm | ✓ | ✓ | 60 |
| 6.0C-H6A-D1-IR-B-120 | 6.0 | 4.4 - 9.3mm | ✓ | ✓ | 120 |
| 8.0C-H6A-D1-IR-B-30 | 8.0 | 4.4 - 9.3mm | ✓ | ✓ | 30 |
| 8.0C-H6A-D1-IR-B-60 | 8.0 | 4.4 - 9.3mm | ✓ | ✓ | 60 |

## Camera Accessories

| ACCESSORY PART NUMBERS | |
|---|---|
| H6A-MT-NPTA1 | Pendant NPT adapter |
| WLMT-1021 | Pendant wall arm, 1.5" NPT female, 20 cm (7.8") long |
| CLADP-1001 | In-Ceiling adapter |
| CLPNL-1011 | Metal ceiling panel for suspended ceiling installations |
| DMSLD-1001 | Weathershield for dome cameras |
| DMBBL-1001 | Replacement clear dome bubble |
| DMBBL-1011 | Replacement IR dome bubble |
| DMSBL-1001 | Optional smoked dome bubble, not compatible with the IR cameras |
| GROM-1001 | Camera sealing grommet, pack of 10 |
| GROM-1011 | Pipe sealing grommet, pack of 10 |
| PLMT-1001 | Pole mount adapter |
| CRNMT-1001 | Corner mount adapter |

# Support

For product support, visit avigilon.com/support.

To learn more, visit: **avigilon.com/h6a-dome**. For customer documentation, visit **docs.avigilon.com/bundle/alta-video/page/Products/Cameras.htm**.

Motorola Solutions, Inc. 500 West Monroe Street, Chicago, IL 60661 U.S.A. motorolasolutions.com

© 2026, Avigilon Corporation. All rights reserved. MOTOROLA, MOTO, MOTOROLA SOLUTIONS and the Stylized M Logo are trademarks or registered trademarks of Motorola Trademark Holdings, LLC and are used under license. All other trademarks are the property of their respective owners.

202604017--EN

Rev 2